AG CENTRUM

ZENIT BLUE BOX

4 cyl.
Schemat Elektryczny
Electric Wiring

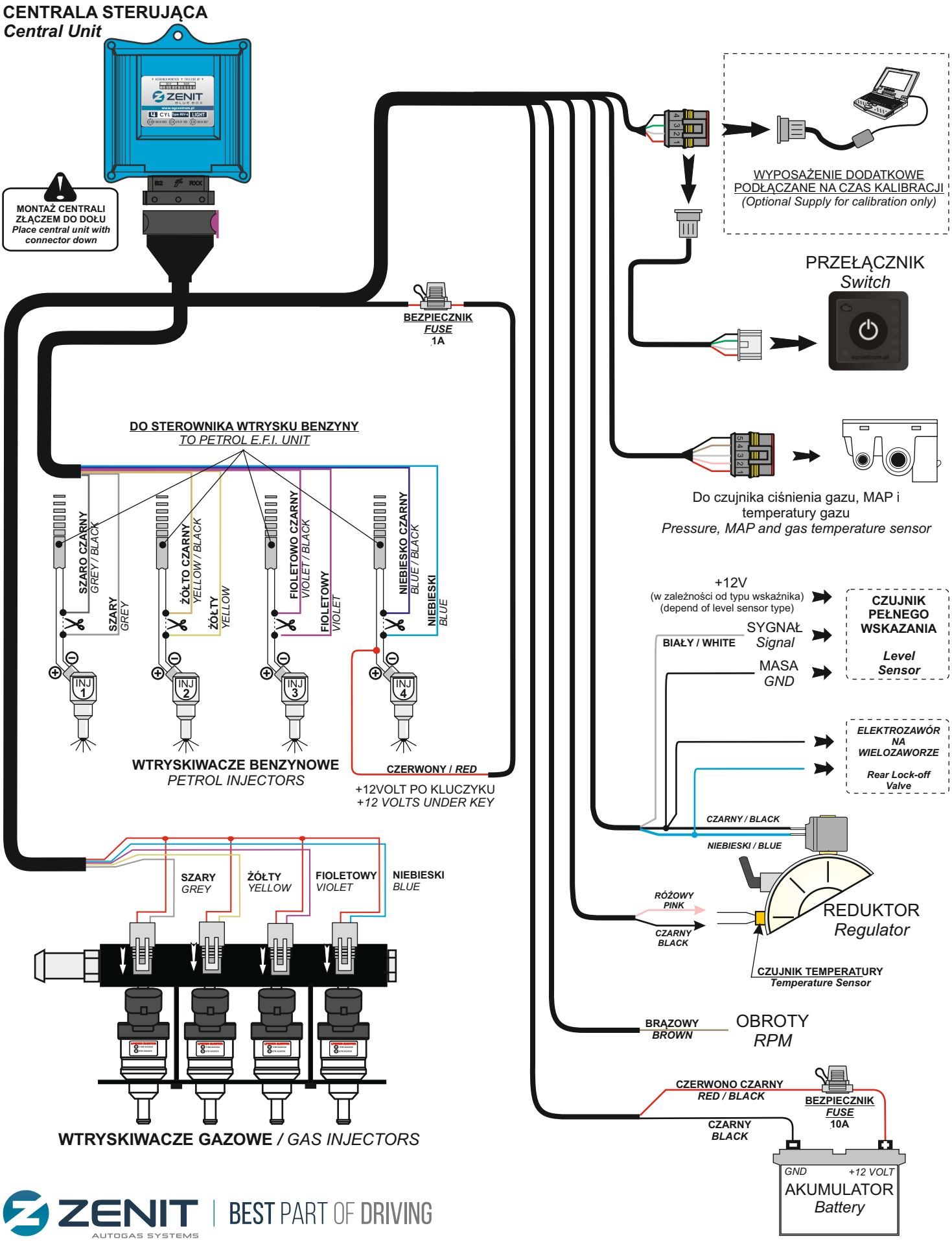

ZENIT AUTOGAS SYSTEMS | BEST PART OF DRIVING